New additional 159 M unit

This unit makes homogenizing and mixing possible in a single production step by adjusting the perforated discs!

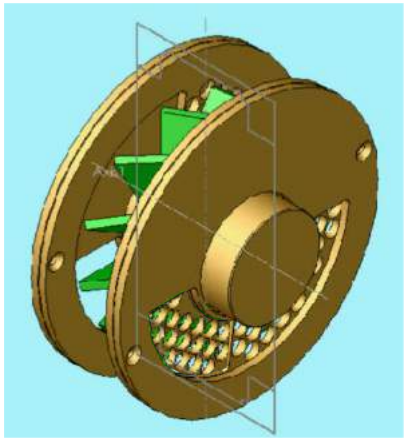

Homogenizing

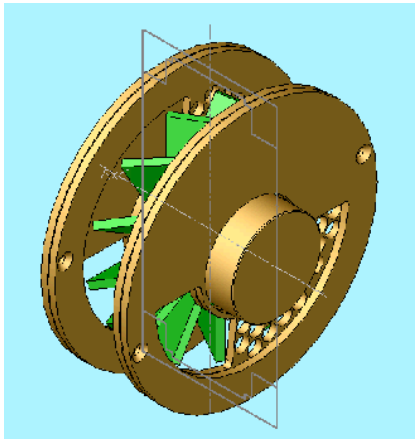

Adjusting

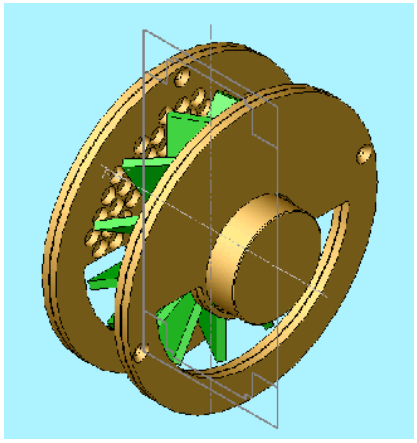

Mixing

Technical data

Machine	159 D	159 C	159 CV	159 CVT	159 GV
Container size	200 Litre	320 Litre	320 Litre	420 Litre	600 Litre
Batch size	150 Litre	200 Litre	200 Litre	300 Litre	500 Litre
Transfer speed (water)	400 Litre /min	500 Litre /min	500 Litre /min	500 Litre /min	600 Litre /min
Connection power Mixing unit	9 / 11 kW	9 / 11 kW	11 kW	11 kW	22 kW
Connection power Vacuum pump	---	----	0,75 kW	0,75 kW	0,75 kW
Connection power Product wiper	---	0,37 kW	0,37 kW	0,37 kW	0,37 kW
Connection power Cover lift	---	---	0,5 kW	0,5 kW	0,5 kW
No. of revolutions Mixing unit	1500 / 3000 rpm	1500 / 3000 rpm	3000 rpm	3000 rpm	3000 rpm
Noise level	70 dBA	70 dBA	70 dBA	70 dBA	70 dBA
Weight	150 kg	450 kg	650 kg	850 kg	910 kg

Special features

- exchangeable tool kits and mixing units for different requirements are available
- automatic cover lift
- different container sizes are available
- machine can be provided with additional paddle mixer
- mixing container with product wiper
- machine made from rust and acid resistant steel and non-rusting materials
- simple cleaning and maintenance
- mixing container can be pulled out and tilted for cleaning
- polarity of the motor is switch-selectable. Frequency control is available
- central operation from a control desk

Technical data subject to change.